Klamath - Hwy 101/Klamath River Bridge

Caltrans Bridge No. 01-28 (01-DN-101-R4.04)

CSMIP Station No. 99710

SENSOR LOCATIONS

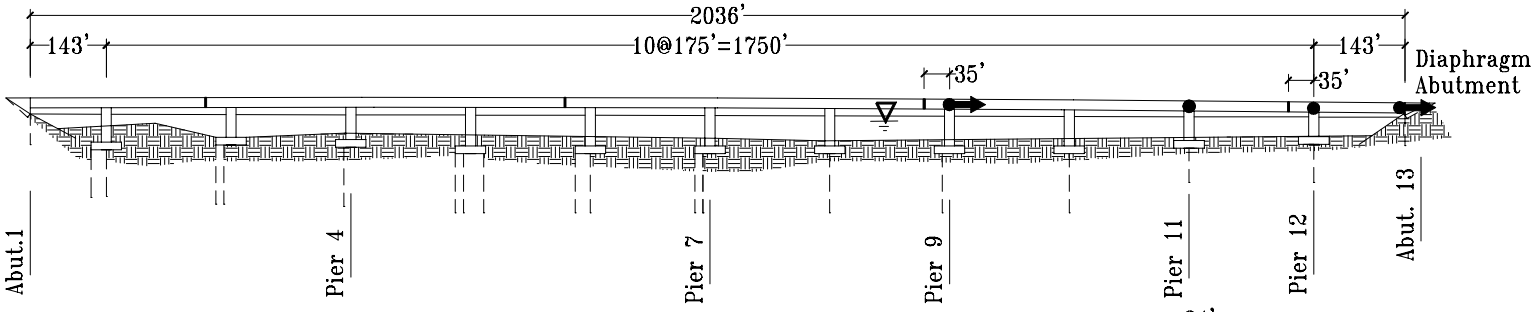

Elevation

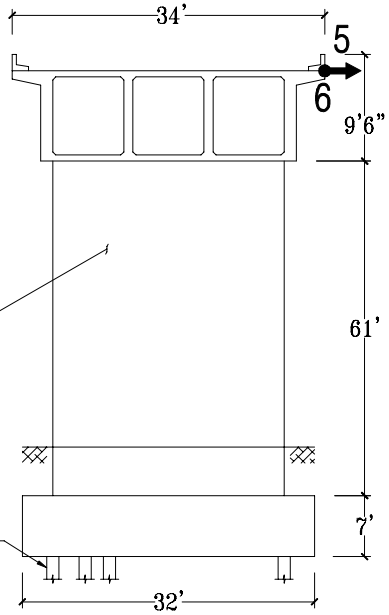

Section A-A' at Pier 9

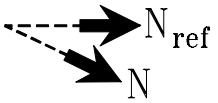

Structure Reference Orientation: N_{ref} = 337°

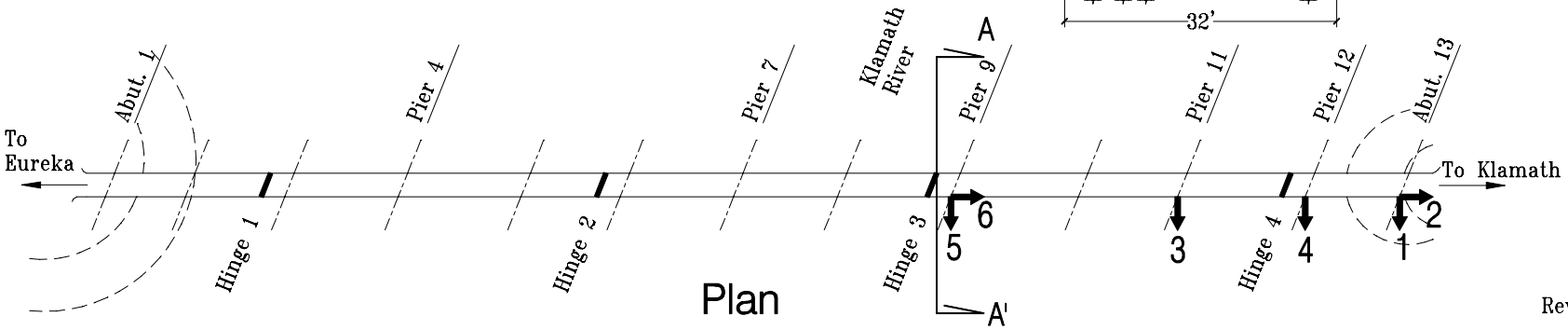

Plan

03/10/95
Rev. 05/08/98