Rio Dell - Hwy 101/Painter Street Overpass

Caltrans Bridge No. 4-236 (01-HUM-101-R52.89)

CSMIP Station No. 89324

SENSOR LOCATIONS

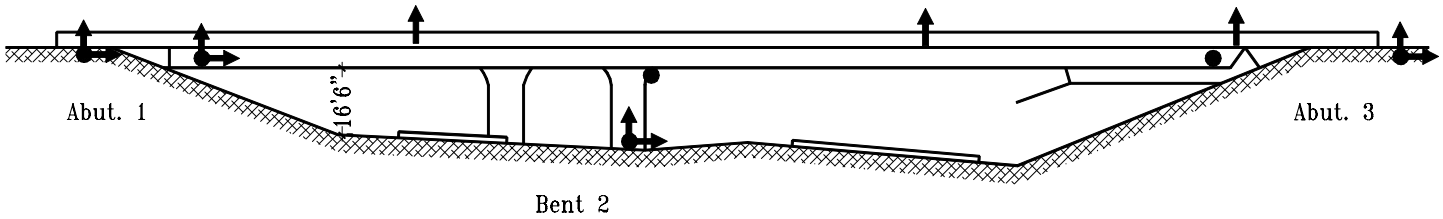

Elevation

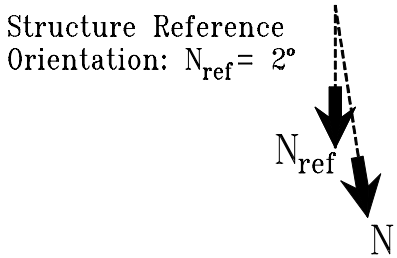

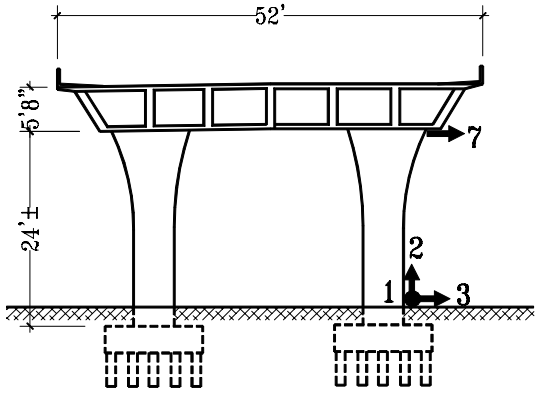

Section A-A'
at Bent 2

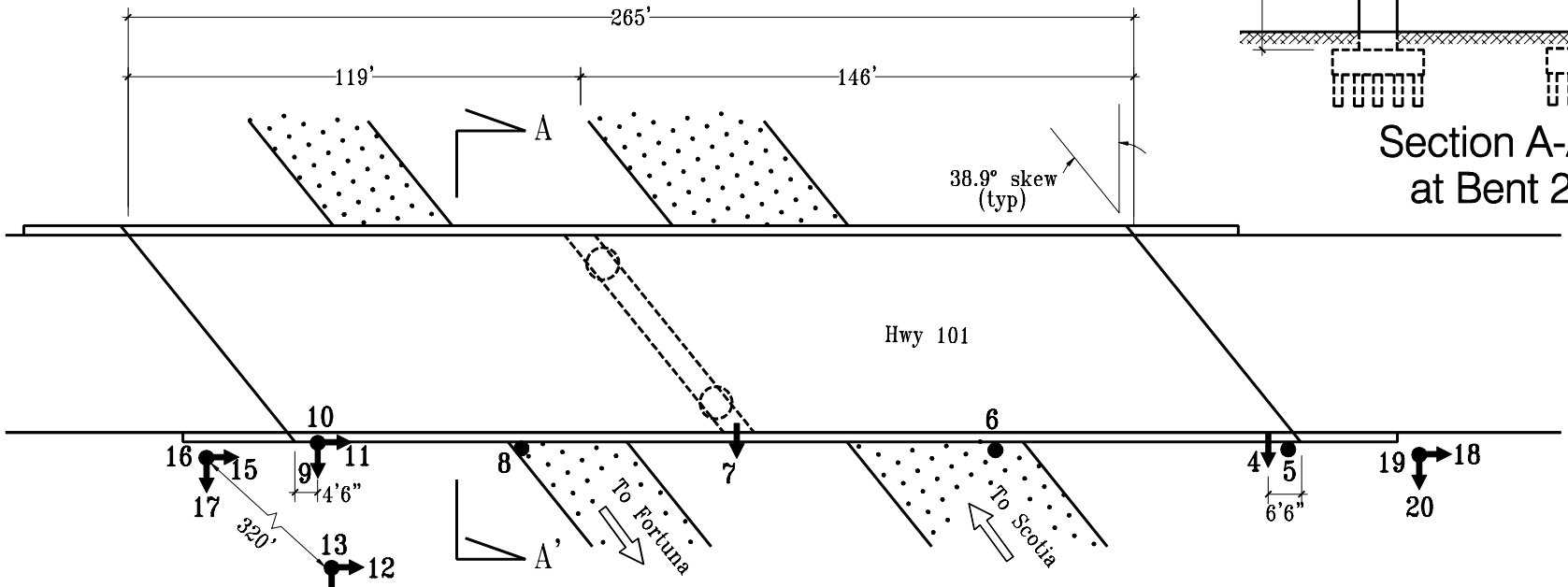

Deck Level Plan

09/29/77
Rev. 05/08/98