Benicia - Martinez/I680 West Bridge

Caltrans Bridge No. 28-153 (04-CC-680-25.04)

CSMIP Station No. 68682

SENSOR LOCATIONS

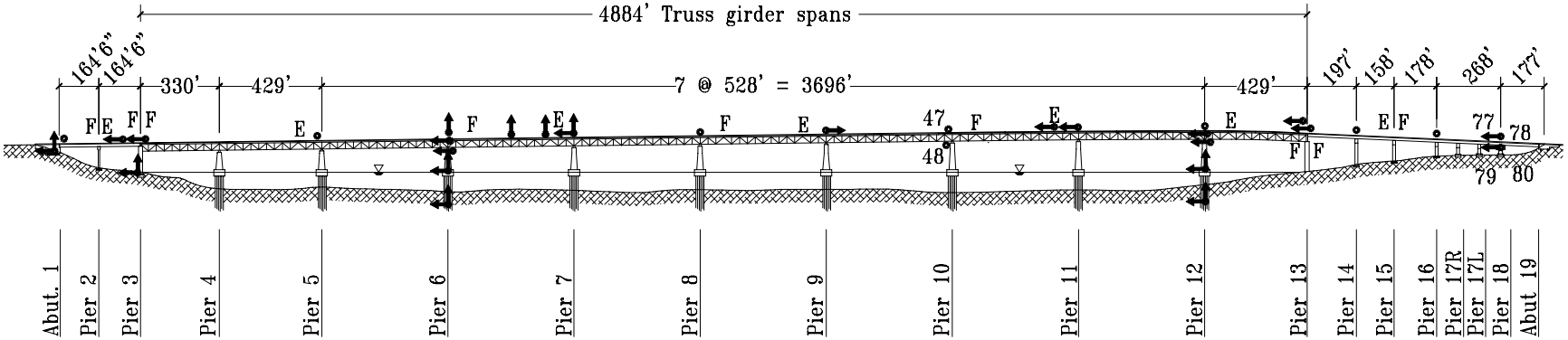

F = Fixed joint
E = Expansion joint

Elevation

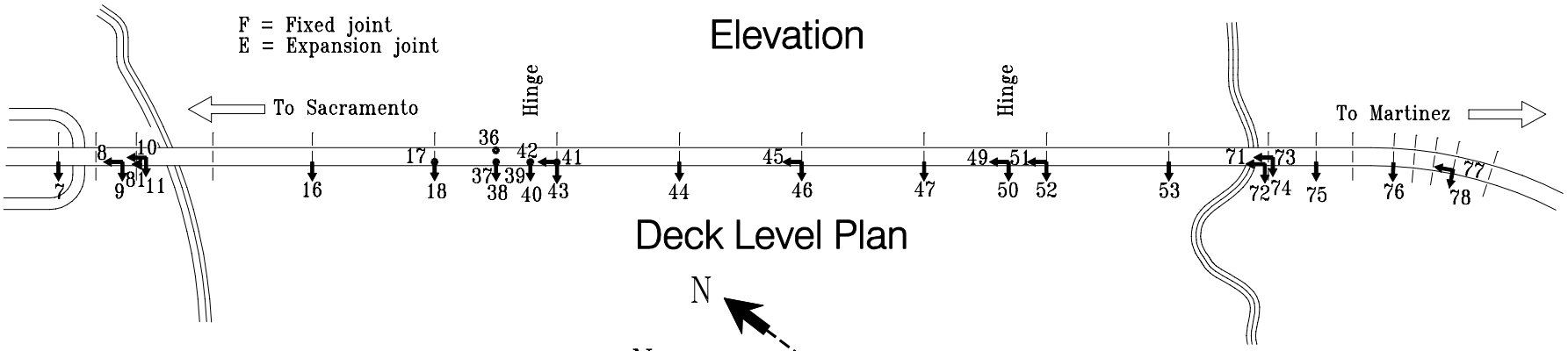

Deck Level Plan

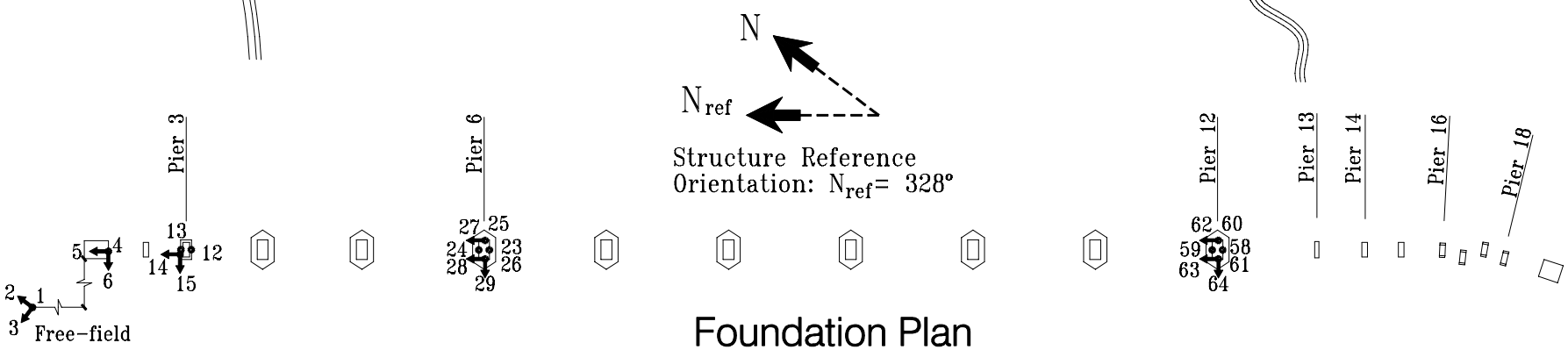

Foundation Plan

Benicia - Martinez/I680 West Bridge

Caltrans Bridge No. 28-153 (04-CC-680-25.04)
CSMIP Station No. 68682

SENSOR LOCATIONS

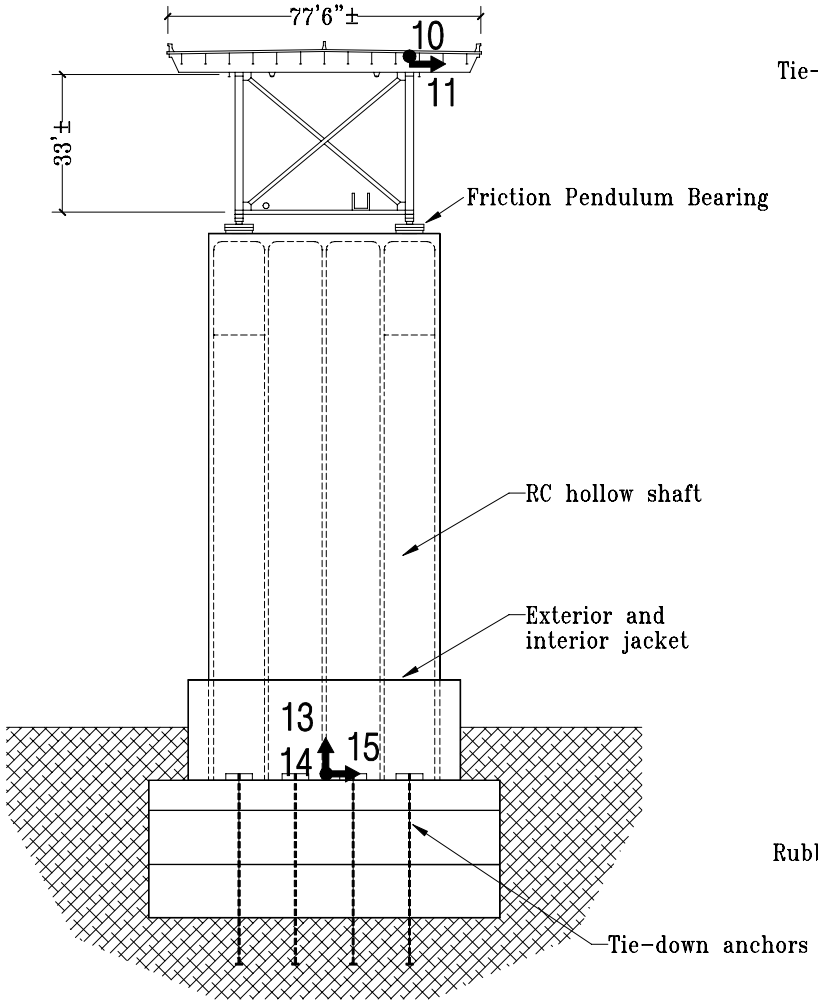

E/W Section at Pier 3

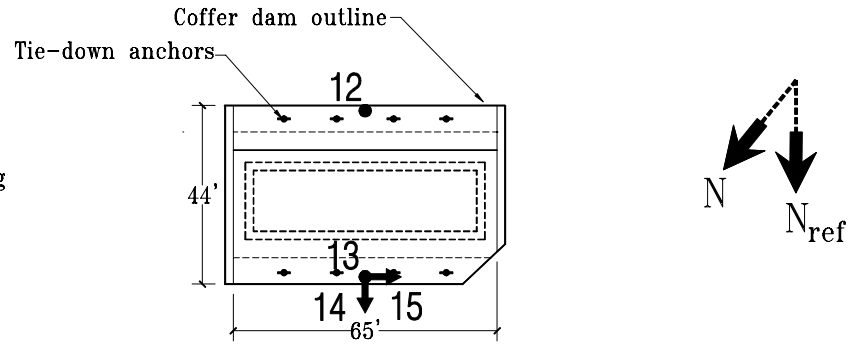

Footing at Pier 3

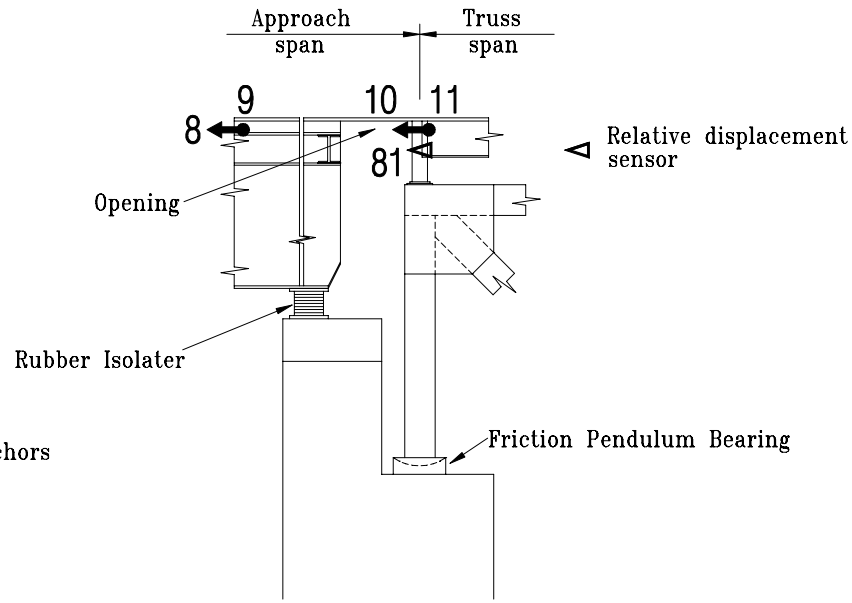

N/S Elevation at Pier 3

Benicia - Martinez Bridge/I680 West Bridge

Caltrans Bridge No. 28-153 (04-CC-680-25.04)
CSMIP Station No. 68682

SENSOR LOCATIONS

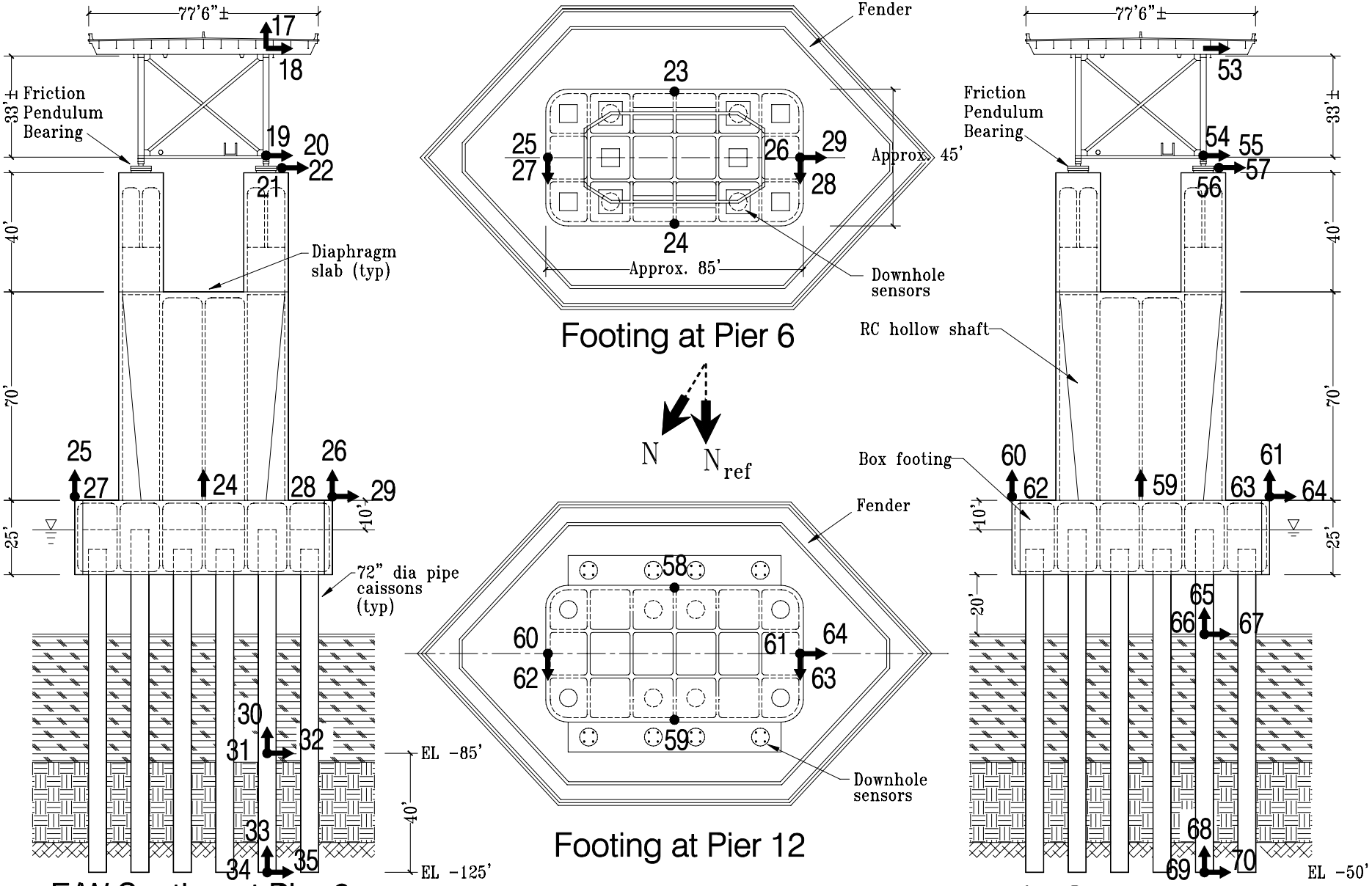

7/18/01

Benicia - Martinez/I680 West Bridge

Caltrans Bridge No. 28-153 (04-CC-680-25.04)
CSMIP Station No. 68682

SENSOR LOCATIONS

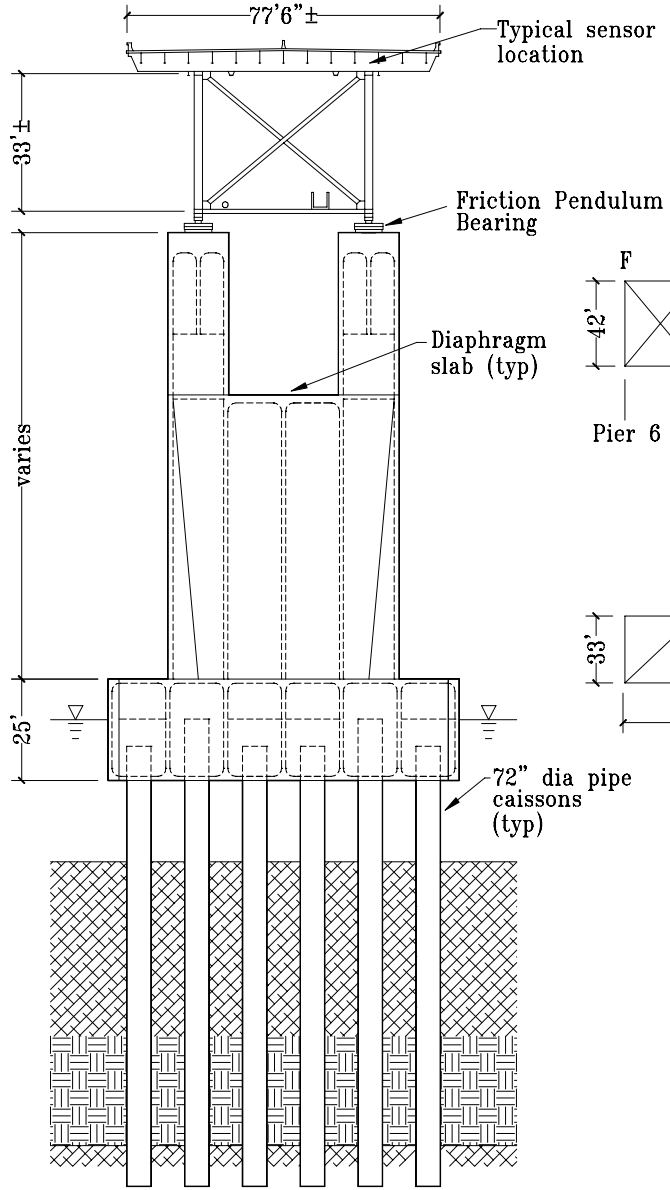

E/W Section at Piers 7-11

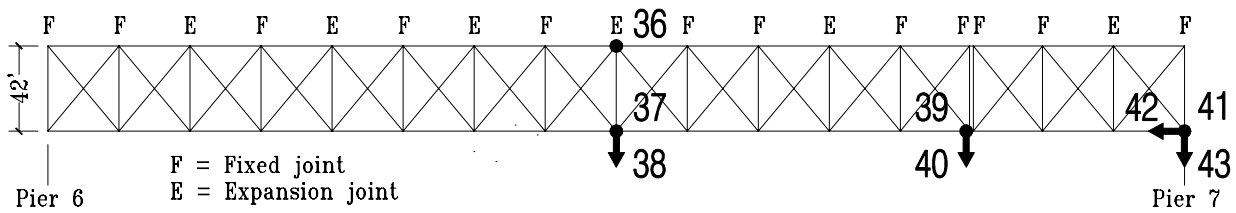

Plan - Pier 6 through Pier 7

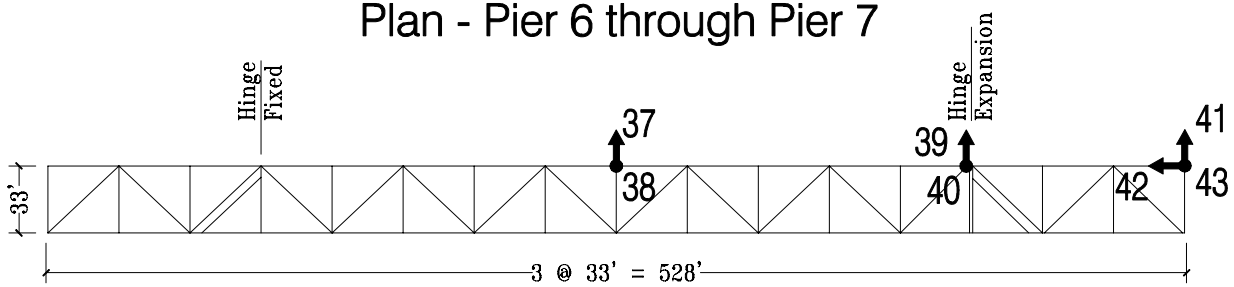

Elevation - Pier 6 through Pier 7

Benicia - Martinez/I680 West Bridge

Caltrans Bridge No. 28-153 (04-CC-680-25.04)
CSMIP Station No. 68682

SENSOR LOCATIONS

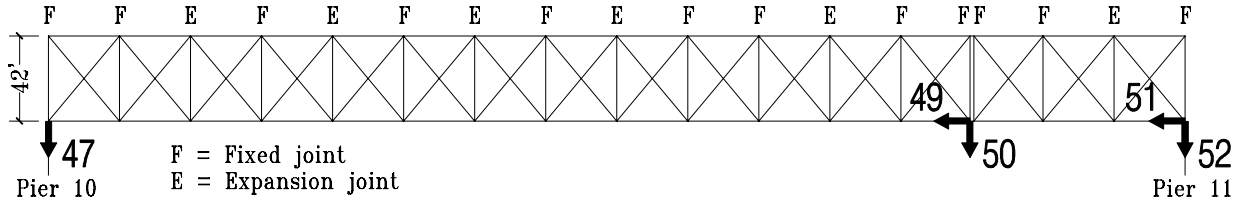

Plan - Pier 10 through Pier 11

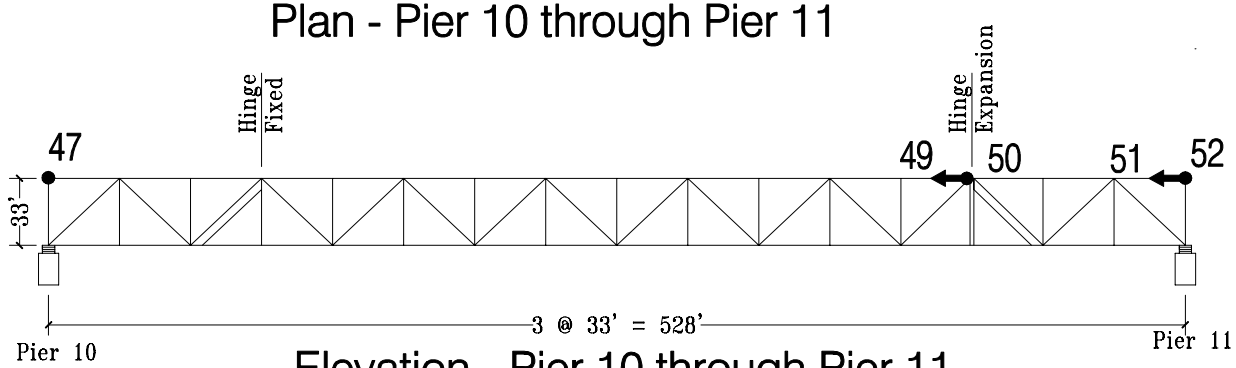

Elevation - Pier 10 through Pier 11

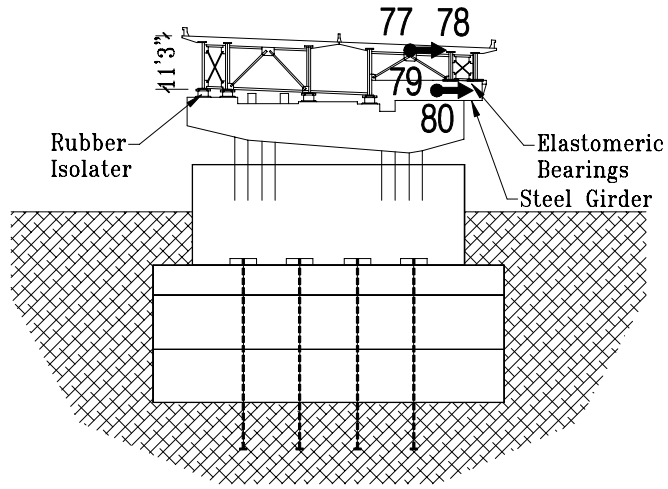

E/W Section at Pier 18