San Francisco Bay - Dumbarton Bridge

Caltrans Bridge No. 35-38 (04-SM-84-29.0)

CSMIP Station No. 58596

SENSOR LOCATIONS

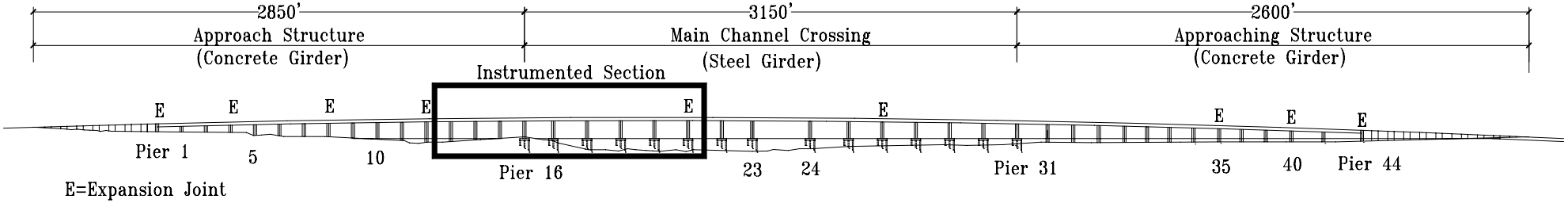

Elevation

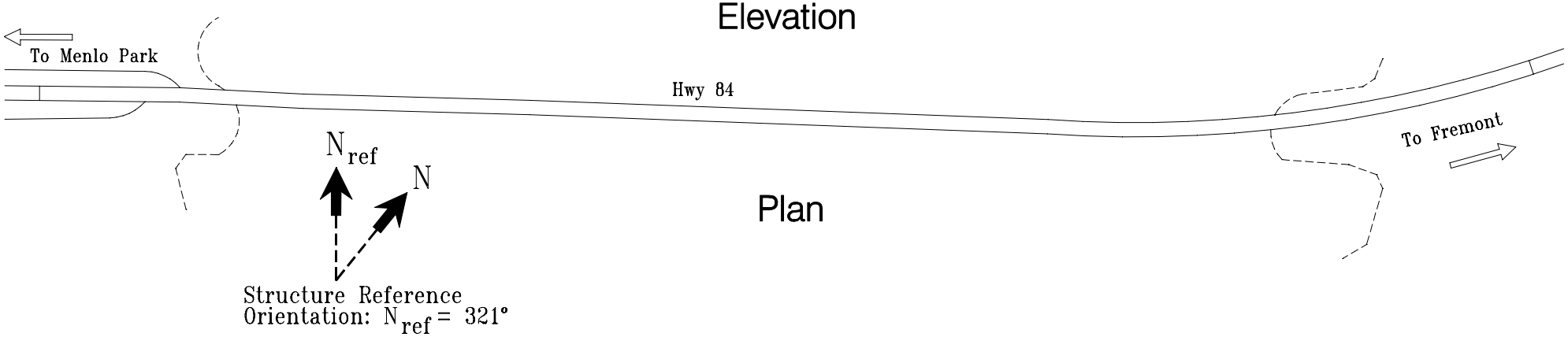

Plan

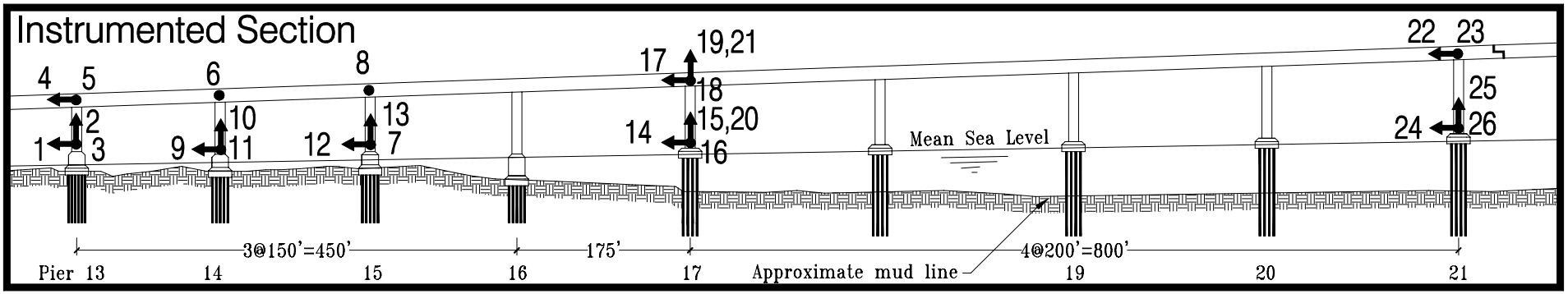

06/24/91
Rev. 04/29/96

San Francisco Bay - Dumbarton Bridge

Caltrans Bridge No.35-38 (04-SM-8429.0)

CSMIP Station No.58596

SENSOR LOCATIONS

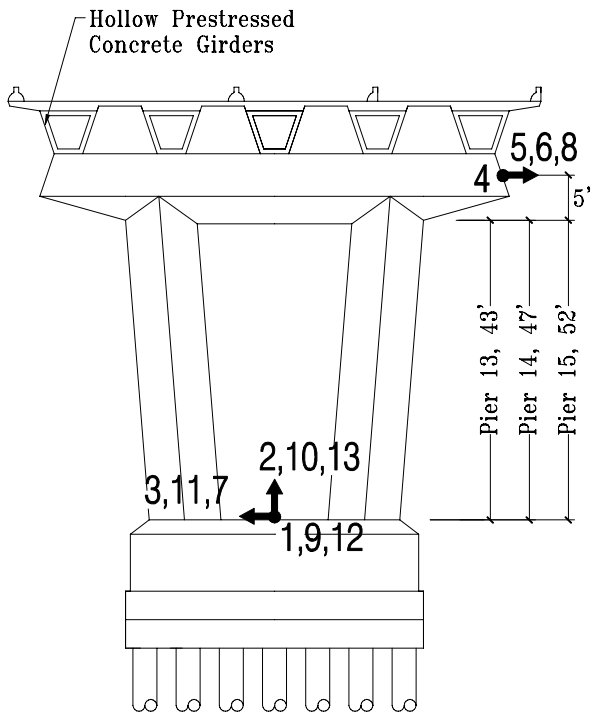

N/S Section @
Piers 13, 14, 15

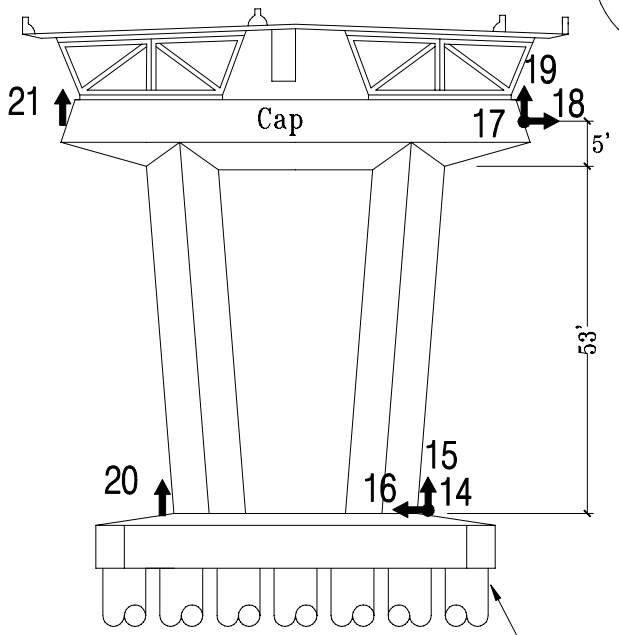

N/S Section @
Pier 17

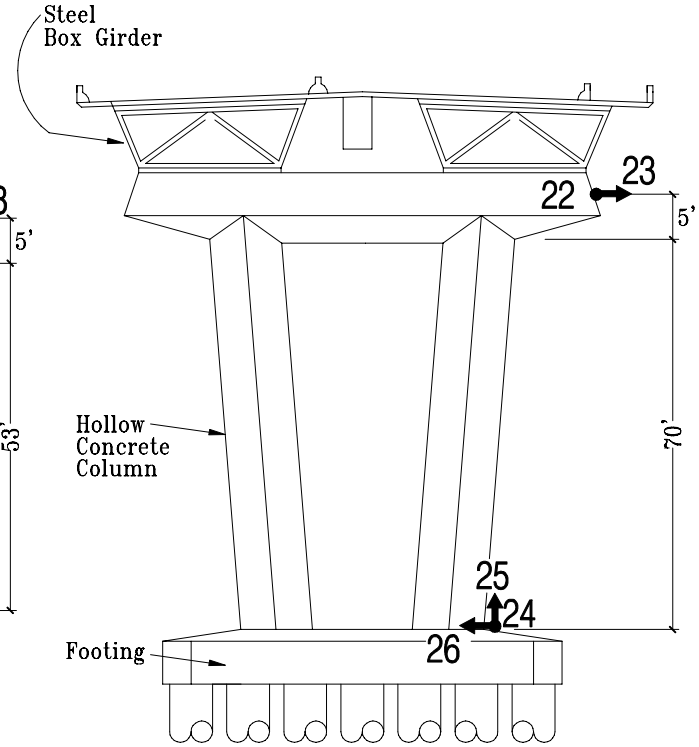

N/S Section @
Pier 21

21-54"
Prestressed Concrete
Piles

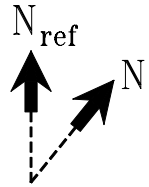

Structure Reference
Orientation: N_{ref} = 321°

Notes: Sensors 1,2,3,4,5, on Pier 13
Sensors 6,9,10, 11 on Pier 14
Sensors 7,8,9,12,13 on Pier 15

06/24/91
Rev. 04/29/98