Sacramento- State Capitol
(CSMIP Station No. 67508)

SENSOR LOCATIONS

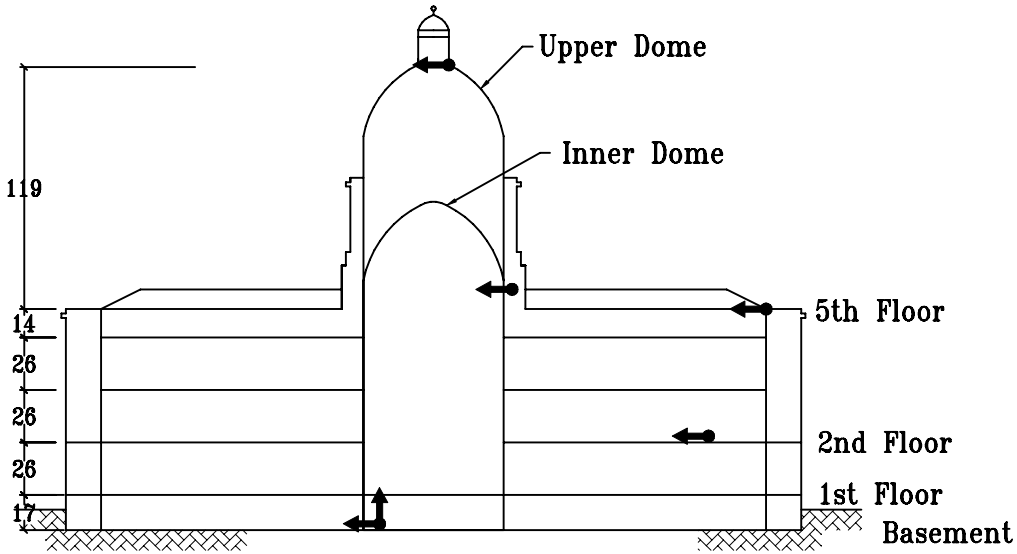

N/S Elevation

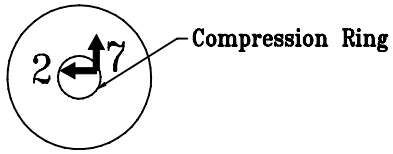

Upper Dome

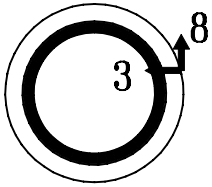

Inner dome

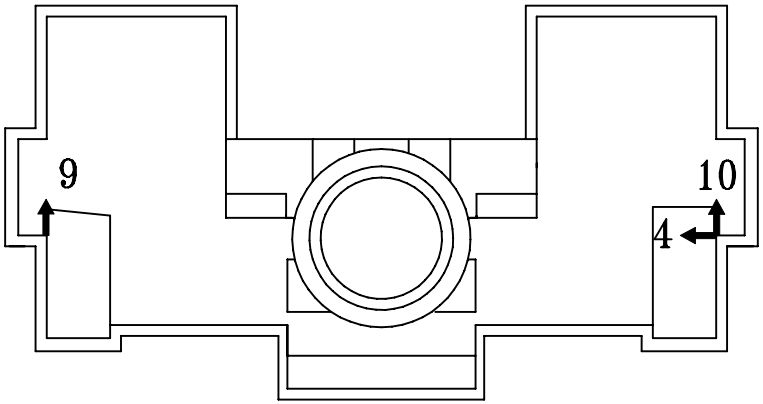

5th Floor Plan

N_{ref}

N

Structure Reference Orientation: N_{ref} = 18°

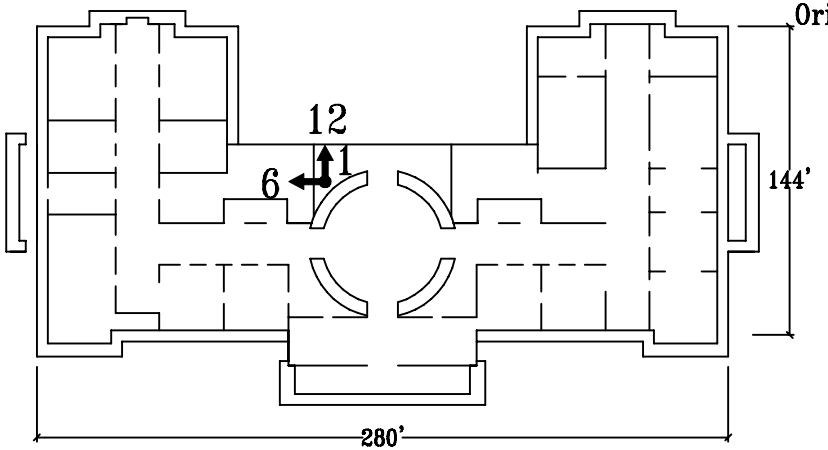

Basement Plan

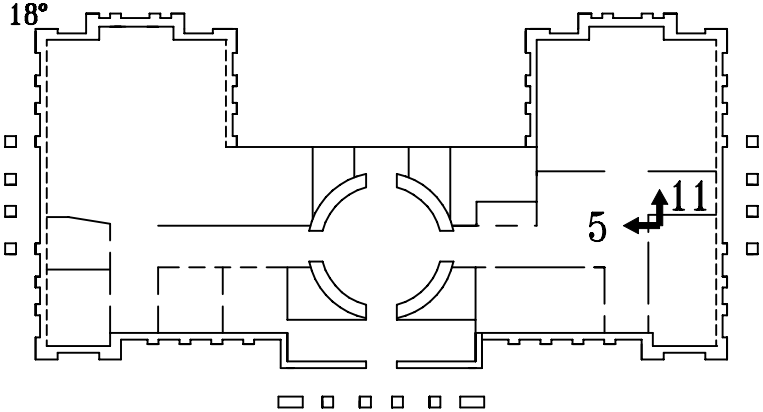

2nd Floor Plan