La Jolla - 2-story University Hospital
(CSMIP Station No. 03233)

SENSOR LOCATIONS

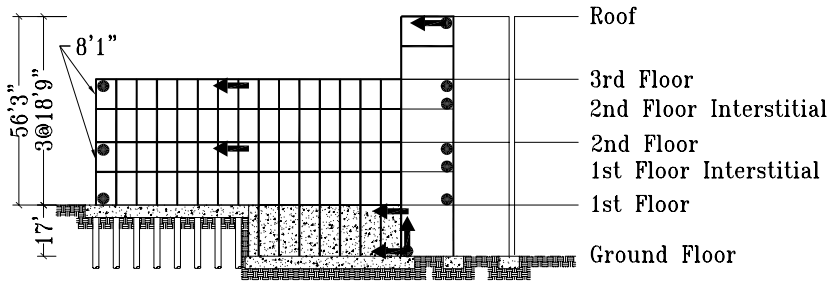

West Elevation

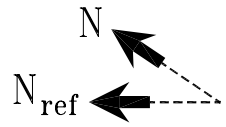

Structure Reference Orientation: N_{ref} = 326°

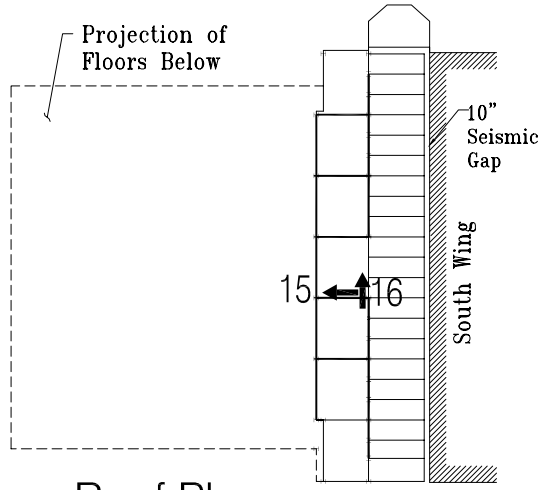

Roof Plan

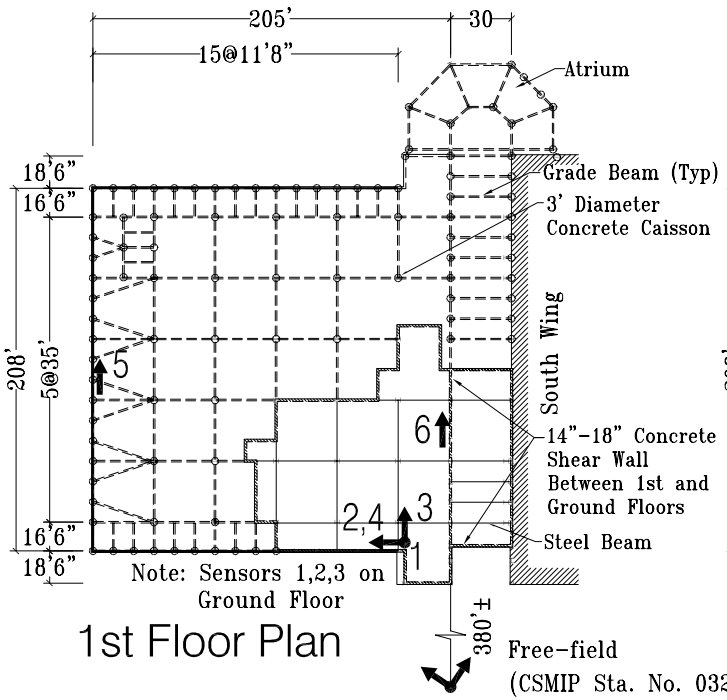

Note: Sensors 1,2,3 on Ground Floor

1st Floor Plan

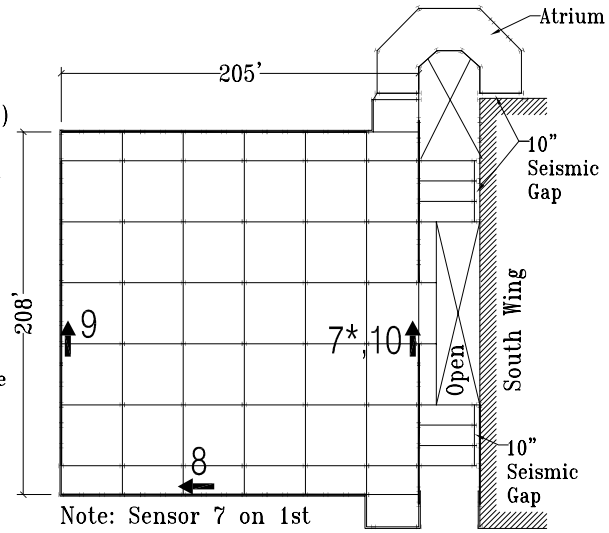

Note: Sensor 7 on 1st Floor Interstitial

2nd Floor Plan

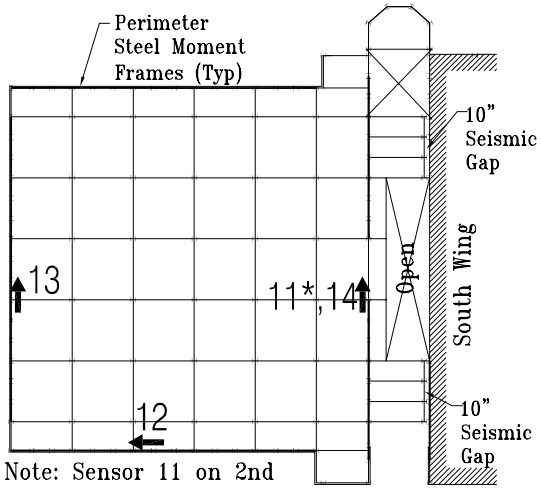

Note: Sensor 11 on 2nd Floor Interstitial

3rd Floor Plan

3/3/04