Colton - 3-Bldg Hospital Complex

(CSMIP Station No. 23788)

Sensor Locations at Nursing Tower

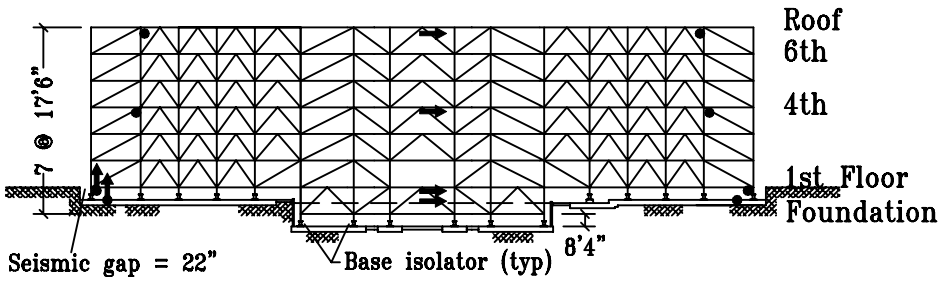

East Elevation

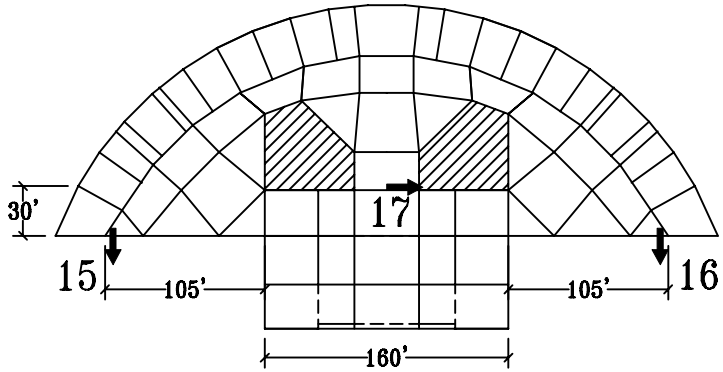

Roof Plan

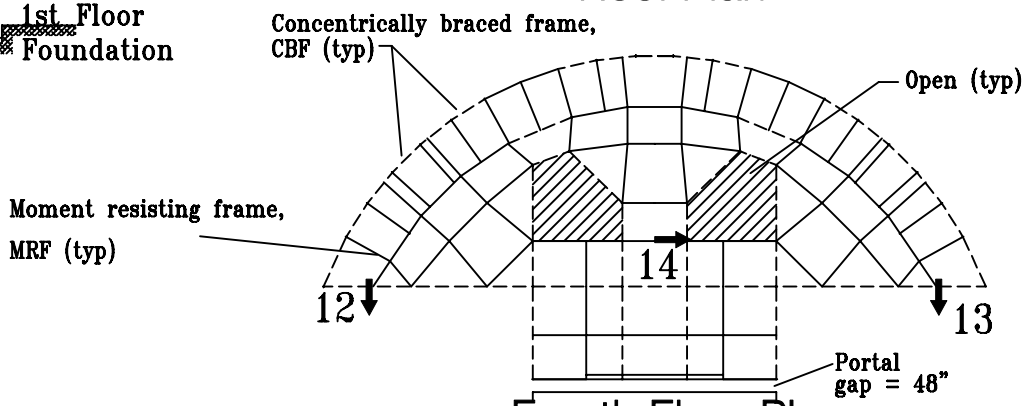

Fourth Floor Plan

N, N_{ref}

Structure Reference
Orientation: N_{ref} = 360°

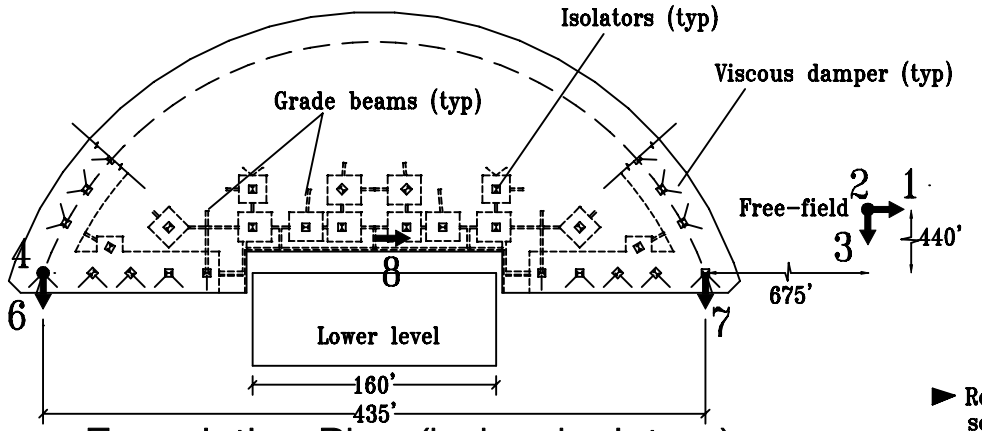

Foundation Plan (below isolators)

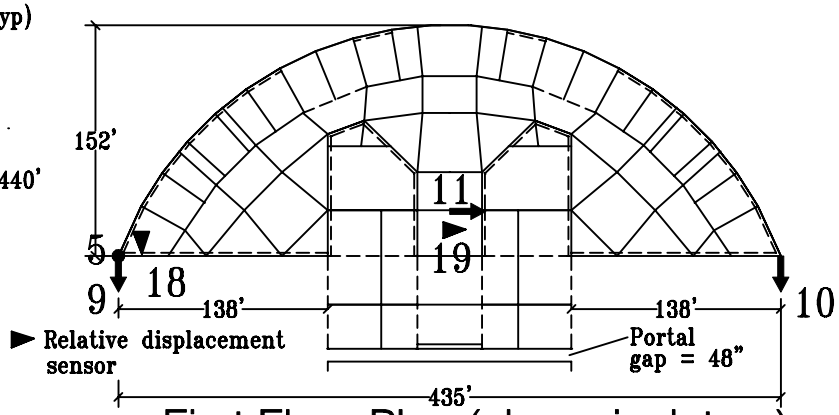

First Floor Plan (above isolators)

7/21/98
Rev. 11/13/98