Irvine - 2-story Caltrans TMC Bldg

(CSMIP Station No. 13208)

SENSOR LOCATIONS

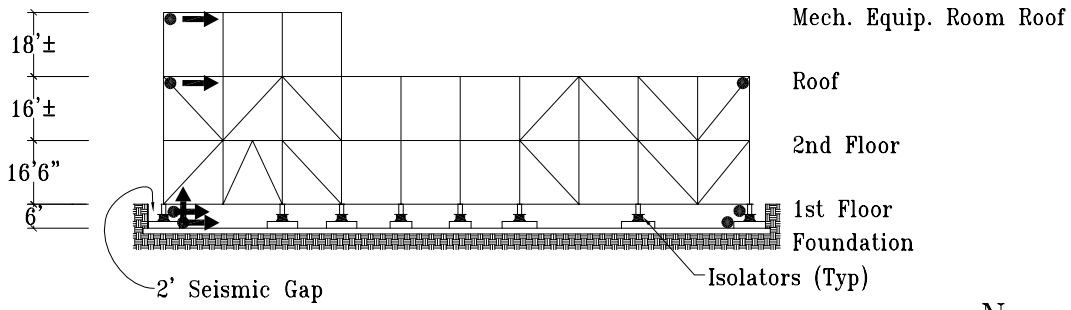

South Elevation

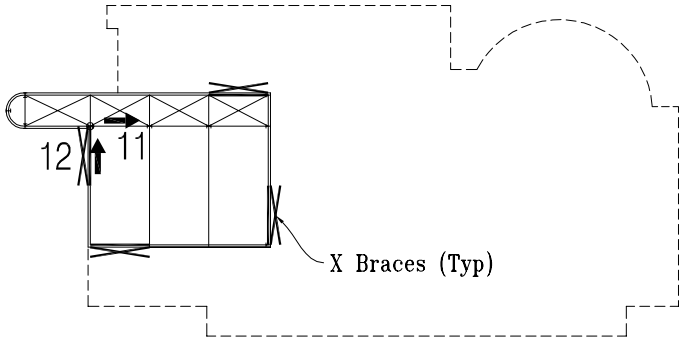

Mech. Equip. Room Roof Plan

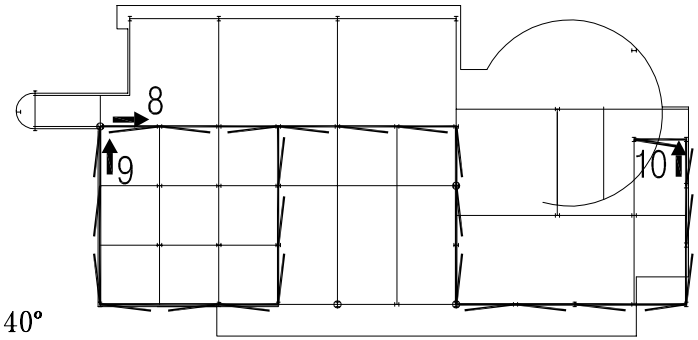

Roof Plan

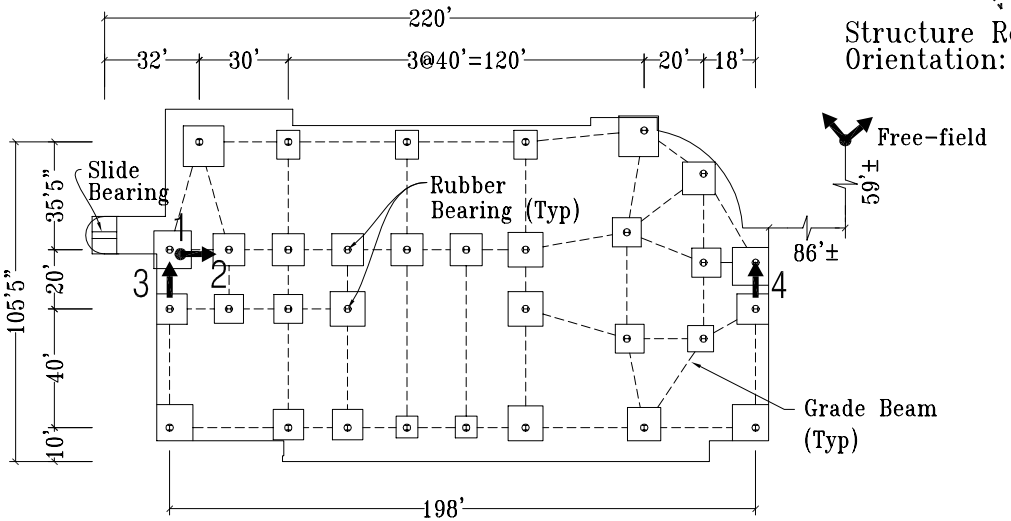

Foundation Plan

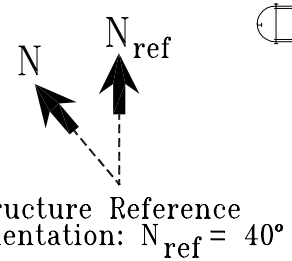

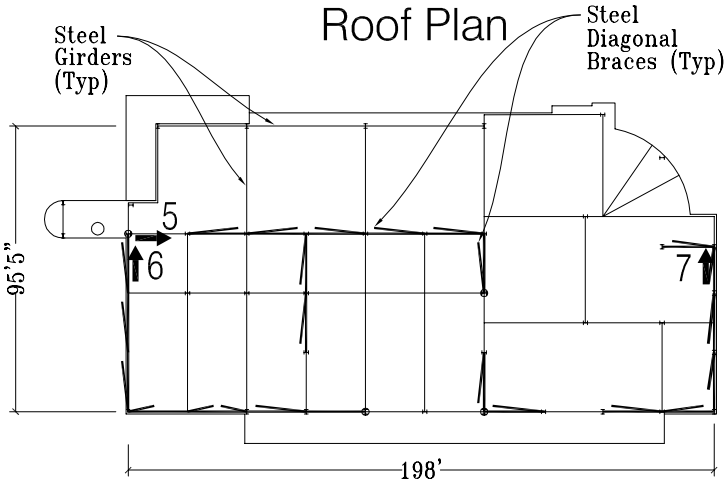

1st Floor Plan

9/17/03