Los Angeles - I10/405 Interchange Bridge

Caltrans Bridge No. 53-1630G (07-LA-405-29.43)

CSMIP Station No. 24670

SENSOR LOCATIONS

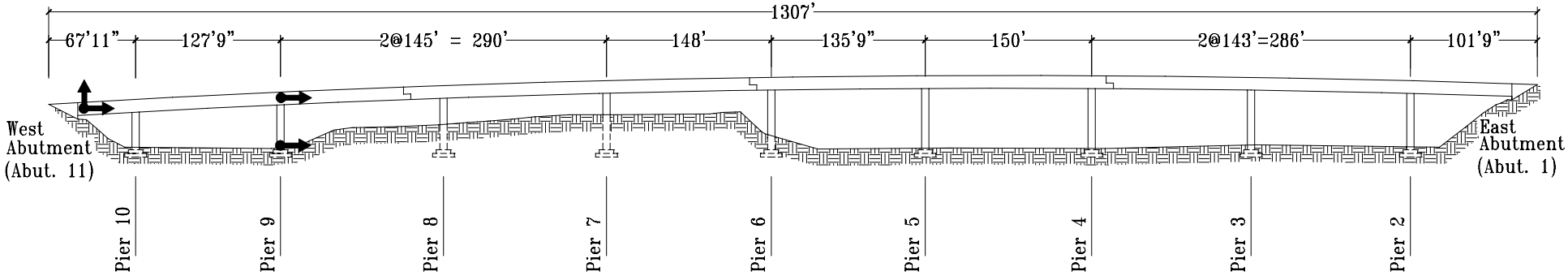

Elevation

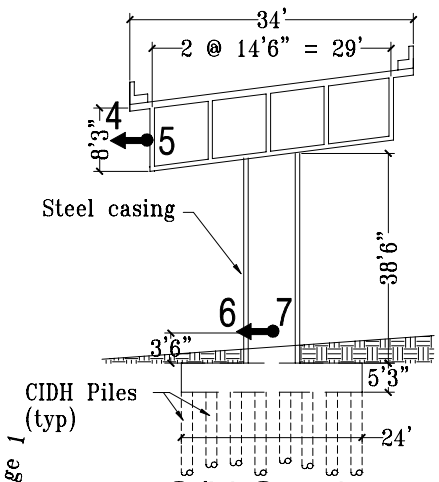

S/N Section at Pier 9

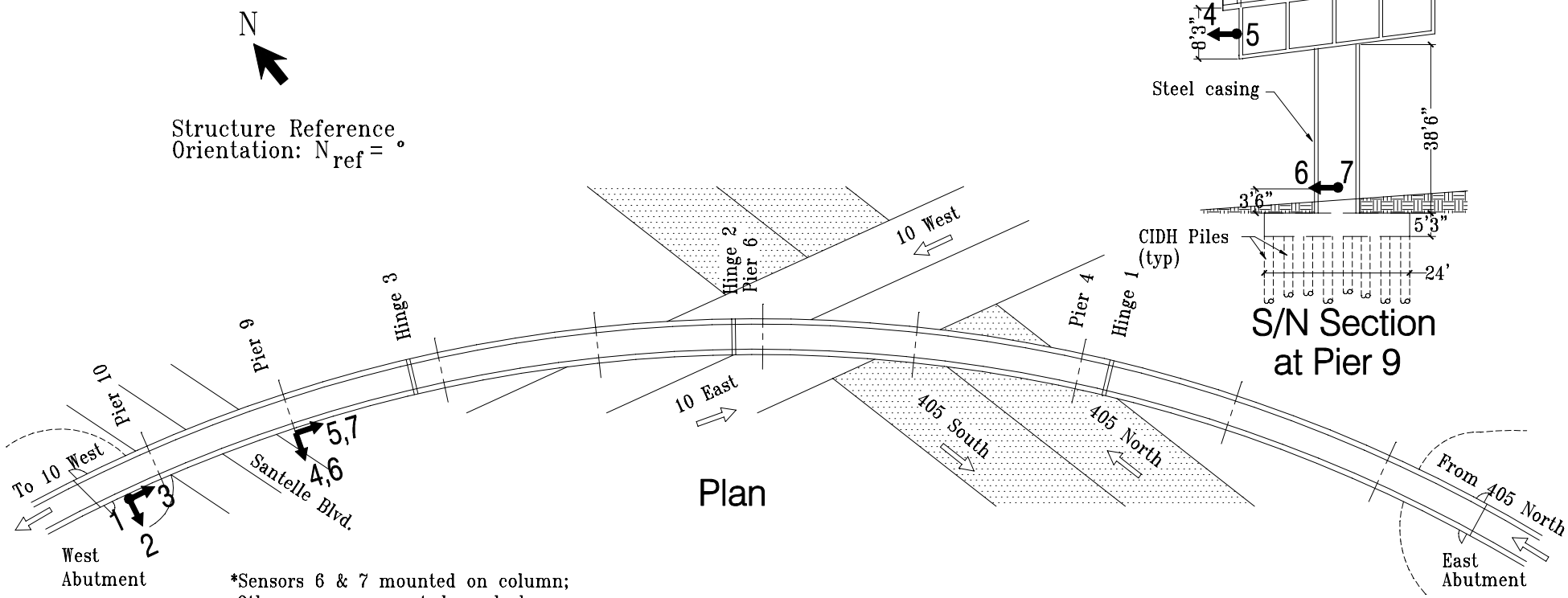

Plan

*Sensors 6 & 7 mounted on column;
Other sensors mounted on deck

Rev. 04/29/98
08/12/93